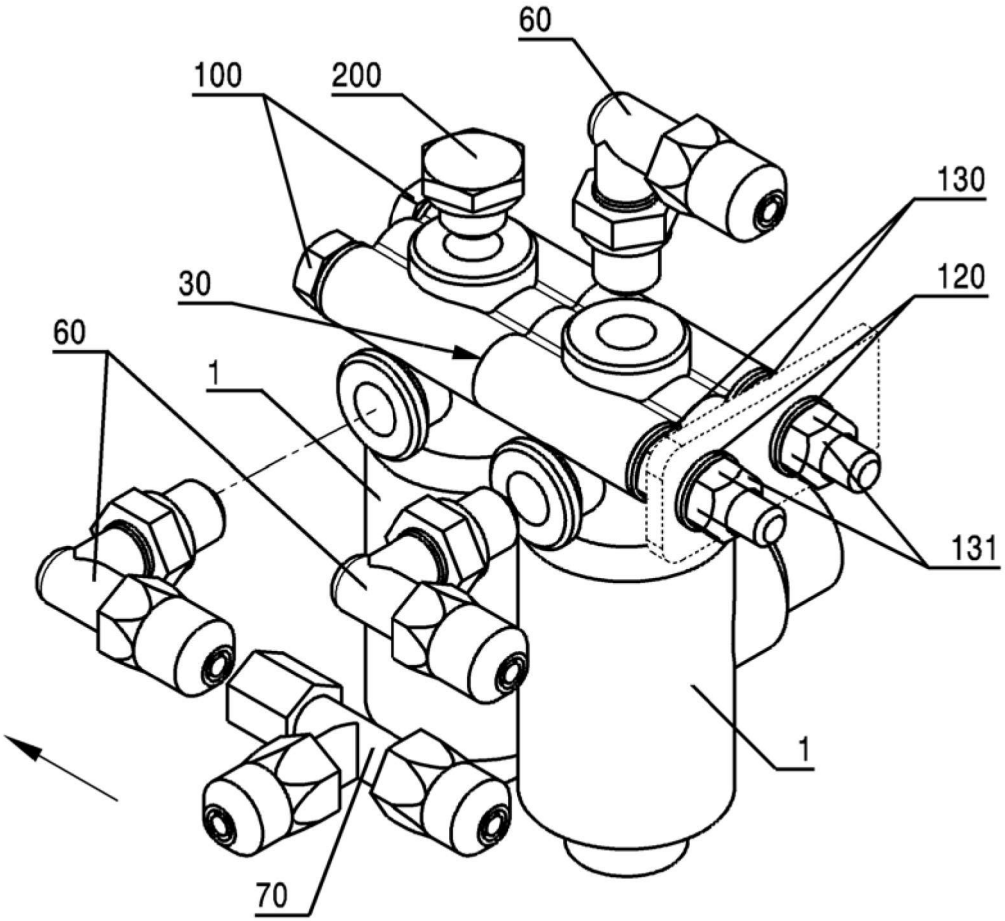VALVE UNIT BLOCK 4th axle non-braked VENTILEINHEIT BLOCK 4.Achse ungebremst UNITE-SOUPAPES BLOC 4e essieu non freiné	from No / up to No	**Figure** **Bild** 99707600088 **Figure**	TADANO **0300-74**